POWERING

Your Innovation



ALTERA®
MEASURABLE ADVANTAGE™

Part Number	Max I_{OUT} (A)	V_{IN} Range (V)	V_{OUT} Range (V)	Switching Frequency (MHz)	Pkg (pins)	Pkg Size (mm) L	W	H	Solution Size (mm^2)[1]	V_{OUT} Set: Voltage ID (VID)	Power Good / POK Flag	Programmable Soft-Start	Precision Enable	Input Synchronization	Output Synchronization	Parallel Capability	Programmable Frequency	Light Load Mode	Automotive-Grade Version Available
Footprint-Optimized PowerSoCs																			
EP5348QI	0.4	2.5 – 5.5	0.6 –V_{IN}[2]	9.0	uQFN14	2.0	1.75	0.9	20										
EP5357/8HUI[3]	0.6	2.4 – 5.5	1.8 – 3.3	5.0	uQFN16	2.5	2.3	1.1	14	•								•	•
EP5357/8LUI[3]	0.6	2.4 – 5.5	0.6 – V_{IN}[2]	5.0	uQFN16	2.5	2.3	1.1	14	•								•	•
EP5368QI	0.6	2.4 – 5.5	0.6 – V_{IN}[2]	4.0	QFN16	3.0	3.0	1.1	21	•									
EP5388QI	0.8	2.4 – 5.5	0.6 – V_{IN}[2]	4.0	QFN16	3.0	3.0	1.1	28	•									
EP53A7/8HQI[3]	1.0	2.4 – 5.5	1.8 – 3.3	5.0	QFN16	3.0	3.0	1.1	21	•								•	•
EP53A7/8LQI[3]	1.0	2.4 – 5.5	0.6 – V_{IN}[2]	5.0	QFN16	3.0	3.0	1.1	21	•								•	•
EN5311QI	1.0	2.4 – 6.6	0.6 – V_{IN}[2]	4.0	QFN20	4.0	5.0	1.1	36	•									
EP53F8QI	1.5	2.4 – 5.5	0.6 – V_{IN}[2]	4.0	QFN16	3.0	3.0	1.1	40		•								
EN5319QI	1.5	2.4 – 5.5	0.6 – V_{IN}[2]	3.2	QFN24	4.0	6.0	1.1	55		•								
EN5322QI	2.0	2.4 – 5.5	0.6 – V_{IN}[2]	4.0	QFN24	4.0	6.0	1.1	58	•	•								
EN5329QI	2.0	2.4 – 5.5	0.6 – V_{IN}[2]	3.2	QFN24	4.0	6.0	1.1	55		•								
EN5337QI	3.0	2.4 – 5.5	0.75 – V_{IN}[2]	4.5 – 5.5	QFN38	4.0	7.0	1.85	75		•	•		•					
EN5339QI	3.0	2.4 – 5.5	0.6 – V_{IN}[2]	3.2	QFN24	4.0	6.0	1.1	55		•								
EN5365/6QI[4]	6.0	2.4 – 5.5	0.75 – 3.3/V_{IN}[2]	5.0	QFN58	10.0	12.0	1.85	229	•	•	•				•			
EN5367QI	6.0	2.5 – 5.5	0.75 – V_{IN}[2]	3.2 – 4.2	QFN54	5.5	10.0	3.0	210		•	•		•		•			
EN5395/6QI[4]	9.0	2.4 – 5.5	0.75 – 3.3/V_{IN}[2]	5.0	QFN58	10.0	12.0	1.85	277	•	•					•			
Performance-Optimized and Wide V_{IN} PowerSoCs																			
EN6310QI	1.0	2.7 – 5.5	0.6 – 3.3	2.2	QFN30	4.0	5.0	1.85	65		•	•							•
EN5335/6QI[4]	3.0	2.4 – 6.6	0.75 – 3.3/V_{IN}[2]	5.0	QFN44	7.5	10.0	1.85	157	•	•	•							
EN6337QI	3.0	2.5 – 6.6	0.75 – V_{IN}[2]	1.5 – 2.3	QFN38	4.0	7.0	1.85	75		•	•		•				•	•
EN6347QI	4.0	2.5 – 6.6	0.75 – V_{IN}[2]	2.5 – 3.5	QFN38	4.0	7.0	1.85	75		•	•		•				•	•
EN2342QI	4.0	4.5 – 14.0	0.75 – 5.0	0.9 – 1.8	QFN68	8.0	11.0	3.0	200		•	•		•	•		•		
EN5364QI	6.0	2.4 – 6.6	0.6 – V_{IN}[2]	3.6 – 4.4	QFN68	8.0	11.0	1.85	160		•	•	•	•	•	•			
EN6362QI	6.0	3.0 – 6.5	0.6 – V_{IN}[2]	1.2	QFN56	8.0	8.0	3.0	170		•	•	•				•		
EN6360QI	8.0	2.5 – 6.6	0.6 – V_{IN}[2]	0.9 – 1.5	QFN68	8.0	11.0	3.0	190		•		•	•	•	•	•		•
EN5394QI	9.0	2.4 – 6.6	0.6 – V_{IN}[2]	3.6 – 4.4	QFN68	8.0	11.0	1.85	190		•		•	•	•	•			
EN63A0QI	12.0	2.5 – 6.6	0.6 – V_{IN}[2]	0.9 – 1.5	QFN76	10.0	11.0	3.0	227		•		•	•	•	•	•		•
Low Dropout Regulators (LDOs)																			
EY1602SI-ADJ	0.05	6.0 – 40.0	2.5 – 12.0		SOIC8	6.2	5.0	1.68	~45										
EY1603TI-ADJ	0.15	6.0 – 40.0	2.5 – 12.0		TSSOP14	6.4	5.0	0.9	~45										
EY1501DI-ADJ	1.0	2.2 – 6.0	0.8 – 5.0		DFN10	3.0	3.0	1.0	~15		•	•							
DC-DC Regulators																			
ER3105QI	0.5	3.0 – 36.0	0.6 – 34	0.3 – 2.0	DFN12	4.0	3.0	1.0	~160		•	•		•			•	•	
ER3110QI	1.0	3.0 – 36.0	0.6 – 12	0.3 – 2.0	DFN12	4.0	3.0	1.0	~160		•	•		•			•	•	
ER2120QI	2.0	5.0 – 14.0	0.6 – 5.0	0.5 – 1.2	QFN24	4.0	4.0	0.9	~165		•	•		•			•		
ER3125QI[5]	2.5	3.0 – 36.0	0.8 – 36.0	0.2 – 2.2	DFN20	4.0	4.0	0.9	~225		•	•		•			•	•	
High Efficiency DDR Memory Termination (VTT)																			
EV1320QI	3.0	1.0 – 1.8	0.5 – 0.9	0.625	QFN16	3.3	3.3	0.9	40		•	•				•			
EV1340QI	5.0	1.0 – 1.8	0.6 – 1.2	1.5	QFN54	5.5	10.0	3.0	125		•	•							
EV1380QI	8.0	1.0 – 1.8	0.6 – 1.2	1.25 – 1.75	QFN68	8.0	11.0	3.0	200		•	•		•	•	•	•		

For a complete list of Enpirion power products, please visit www.altera.com/enpirion-power-solutions.html

Notes:

1. Size estimate for single-sided PCB including all suggested external components. Smaller size may be possible with double-sided PCB design.
2. Maximum $V_{OUT} = V_{IN} - V_{DROPOUT}$, where $V_{DROPOUT} = R_{DROPOUT}$ x Load Current. Reference device datasheet to calculate $V_{DROPOUT}$.
3. Only "7" version features Light Load Mode. Only "8" version available in Automotive-Grade.
4. Only "5" version features V_{OUT} Set by VID.
5. Supports both buck and buck-boost modes of operation.

Also available:

ES1030QI: Tiny, Low Profile, Four-channel Power Rail Sequencer
EC7401QI: Multi-phase Controller with Voltage ID (VID) Compliant Interface
ED8101P0xQI: Single-Phase Digital Controller with PMBus Compliant Interface
ED8106N0xQI: Single-Phase Digital Controller
EC7100VQI: Single-phase PWM Controller

Power Tree Worksheet

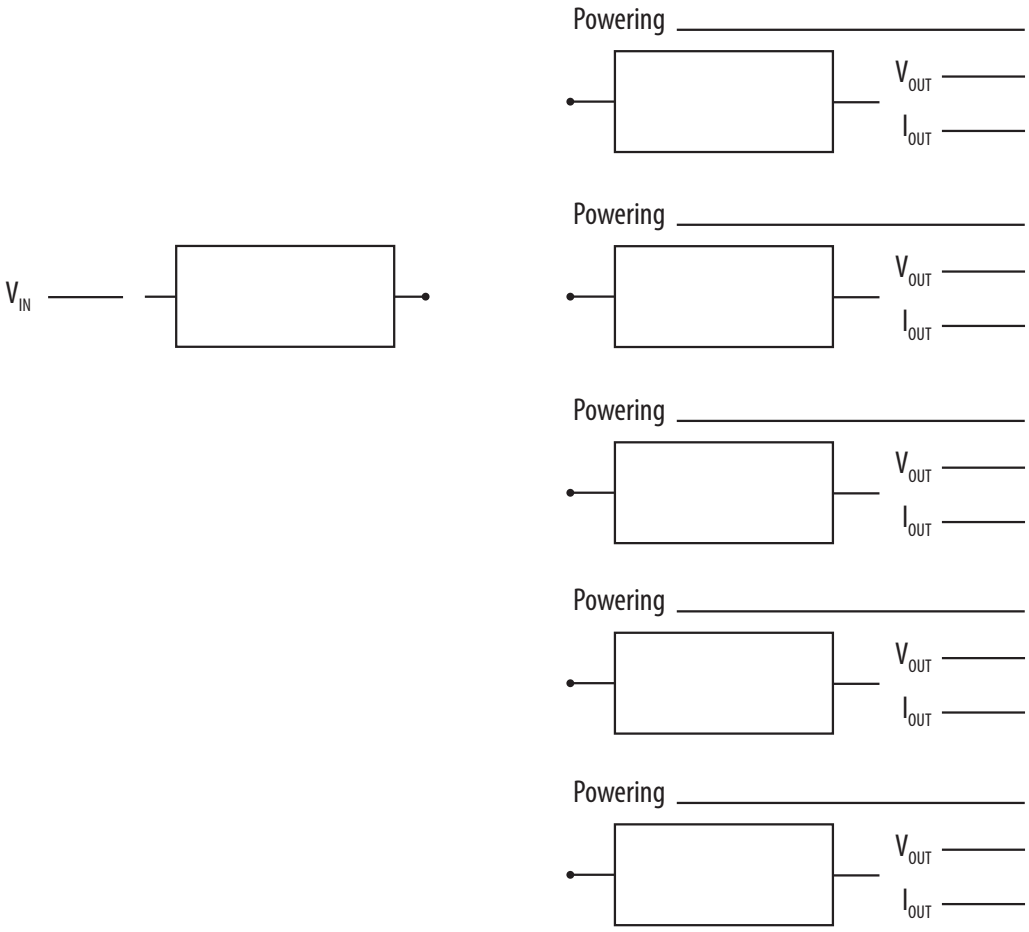

Example Power Tree: Cyclone V GT

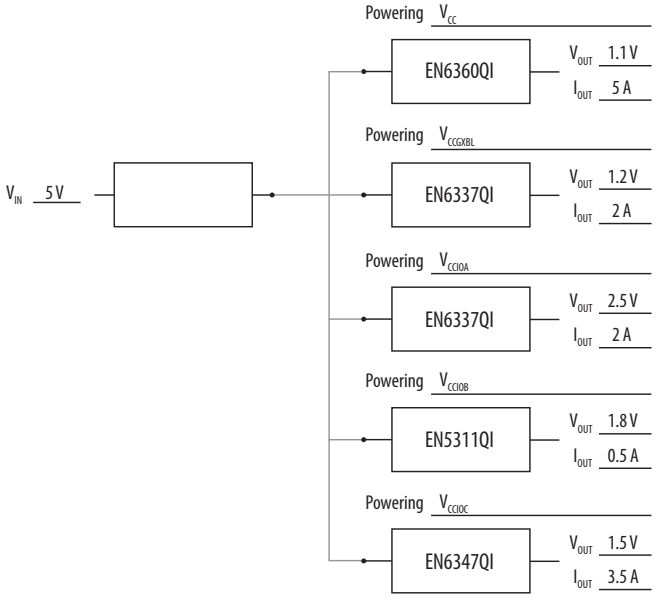

Notes

Achieve Unprecedented Power Density and Performance with Enpirion PowerSoC DC-DC Step-Down Converters

Enpirion PowerSoC solutions integrate all the key elements of a DC-DC step-down converter in one easy-to-use package that provides:

Highest Power Density and Smallest Footprint

Greatly reduce the amount of PCB space required for your power supply.

High Efficiency and Thermal Performance

Optimized with up to 96 percent efficiency with industrial-grade and automotive-grade options available.

Lowest Component Count and Higher Reliability

Designed and manufacturing-tested as a complete power system to deliver an unsurpassed 45,000-year MTBF reliability.

Ease of Design and Fastest Time to Market

Fully validated, turnkey designs that require over 40% less design time than discrete power solutions.

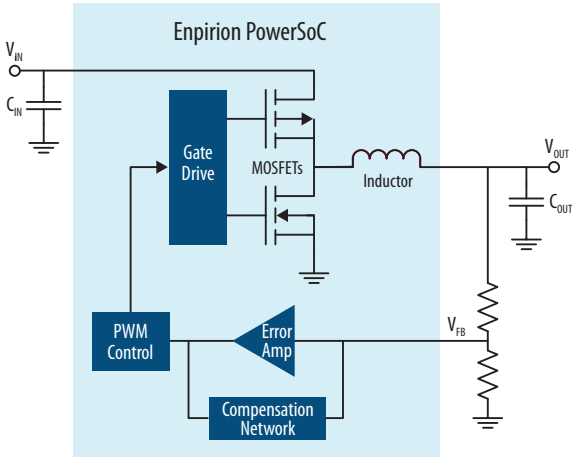

Enpirion Offers Lower Ripple than the Competition

Enpirion PowerSoC

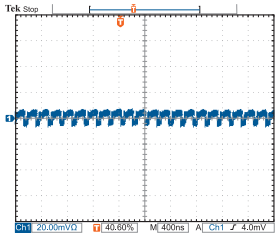

Competitor Module

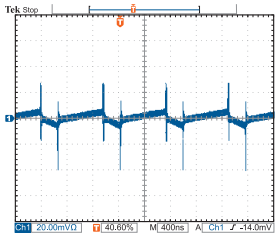

5 V Input, 3.3 V Output, 500 MHz Bandwidth

Fast Transient Response Cuts Bulk Capacitance

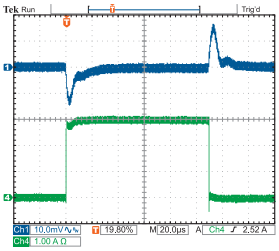

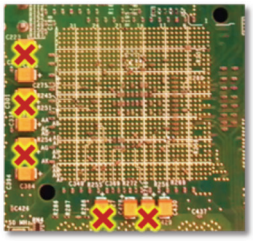

5 V Input, 3.3 V Output

Achieve Excellent EMI Performance

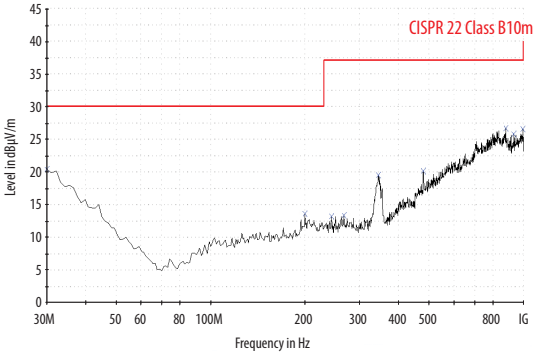

Enpirion Delivers Significant Size and Cost Savings

Enpirion PowerSoC



Only requires small 0805 capacitors.

Competitor Module

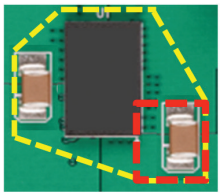

Requires components on front and back of PCB, including larger 1210 capacitors

Altera Corporation
101 Innovation Drive
San Jose, CA 95134
USA
www.altera.com

Altera European Headquarters
Holmers Farm Way
High Wycombe
Buckinghamshire
HP12 4XF
United Kingdom
Telephone: (44) 1494 602000

Altera Japan Ltd.
Shinjuku i-Land Tower 32F
6-5-1, Nishi-Shinjuku
Shinjuku-ku, Tokyo 163-1332
Japan
Telephone: (81) 3 3340 9480
www.altera.co.jp

Altera International Ltd.
Unit 11-18, 9/F
Millennium City 1, Tower 1
388 Kwun Tong Road
Kwun Tong
Kowloon, Hong Kong
Telephone: (852) 2945 7000

Copyright © 2015 Altera Corporation, 101 Innovation Drive, San Jose, California 95134, USA. ALTERA, ARRIA, CYCLONE, ENPIRION, MAX, MEGACORE, NIOS, QUARTUS & STRATIX are Reg. U.S. Pat. & Tm. Off. and Altera marks in and outside the U.S. All other words and logos identified as trademarks or service marks are the property of their respective holders as described at www.altera.com/common/legal.html. December 2015

Broch 1008-1.2